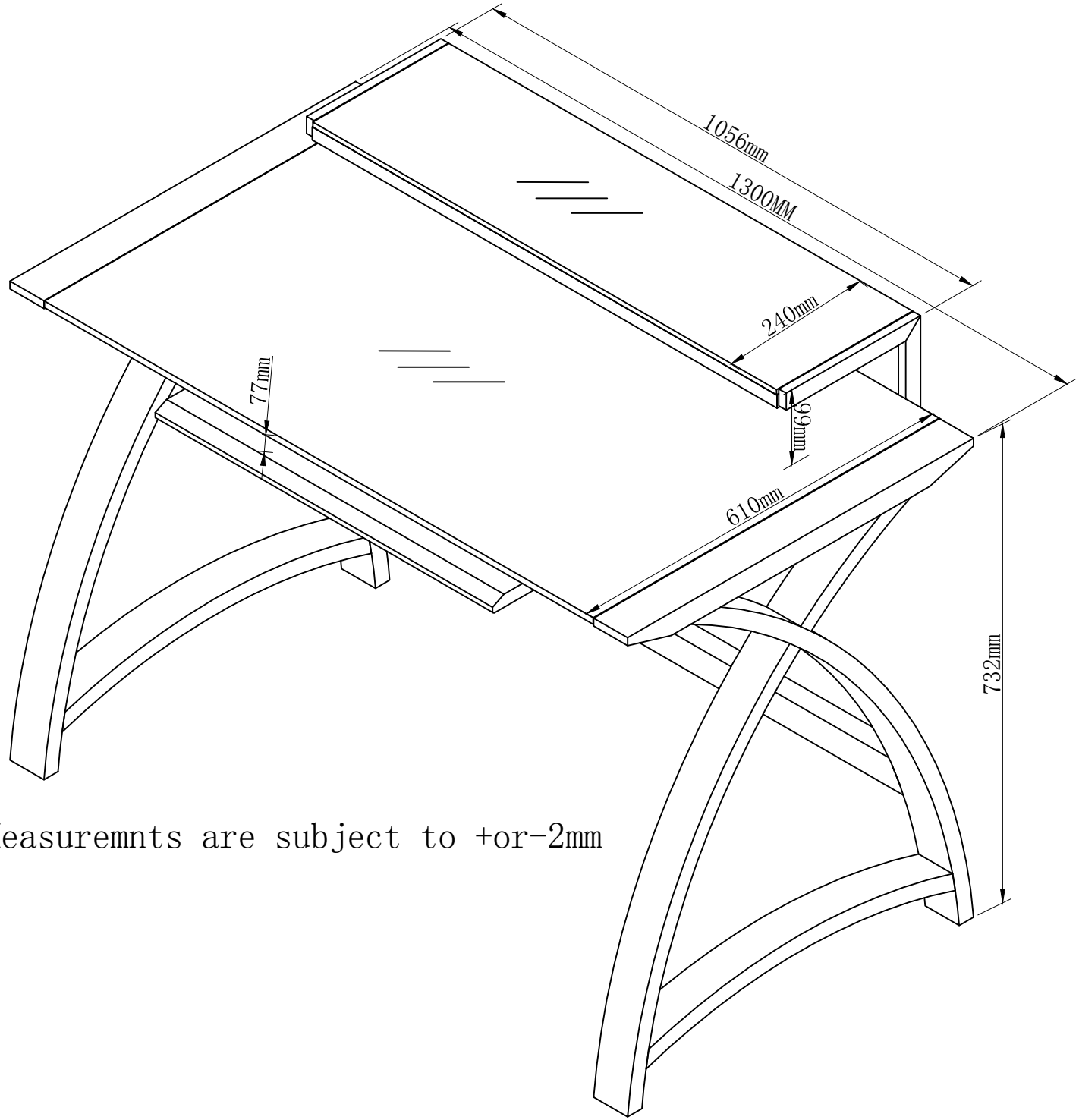

*Measuremnts are subject to +or-2mm